Appliance Controller

by
LELIS, KATHRYNA

CPE161P-4_C1
REAL-TIME EMBEDDED SYSTEM

MAPÚA UNIVERSITY

INTRODUCTION

Objective Overview:

- **To demonstrate how an appliance controller works in real-time.**
- **To be able apply what you have learned in logic circuits and switching theory, microprocessors, and CPE160P.**
- **To be able to apply real-time embedded system using arduino kit.**

MAPÚA UNIVERSITY

EXPERIMENT OVERVIEW

- Components Used:
  - Arduino Kit
  - LED
  - LCD I2C
  - Stepper Motor
  - Servo Motor
  - Buzzer
  - IR remote
  - IR receiver

- Appliance Control Feature:
  - Remote Controlled
  - Real-Time Controlled
  - LCD output for device monitoring
  - User-Friendly

MAPÚA UNIVERSITY

DISCUSSION - MATERIALS PIN OUT

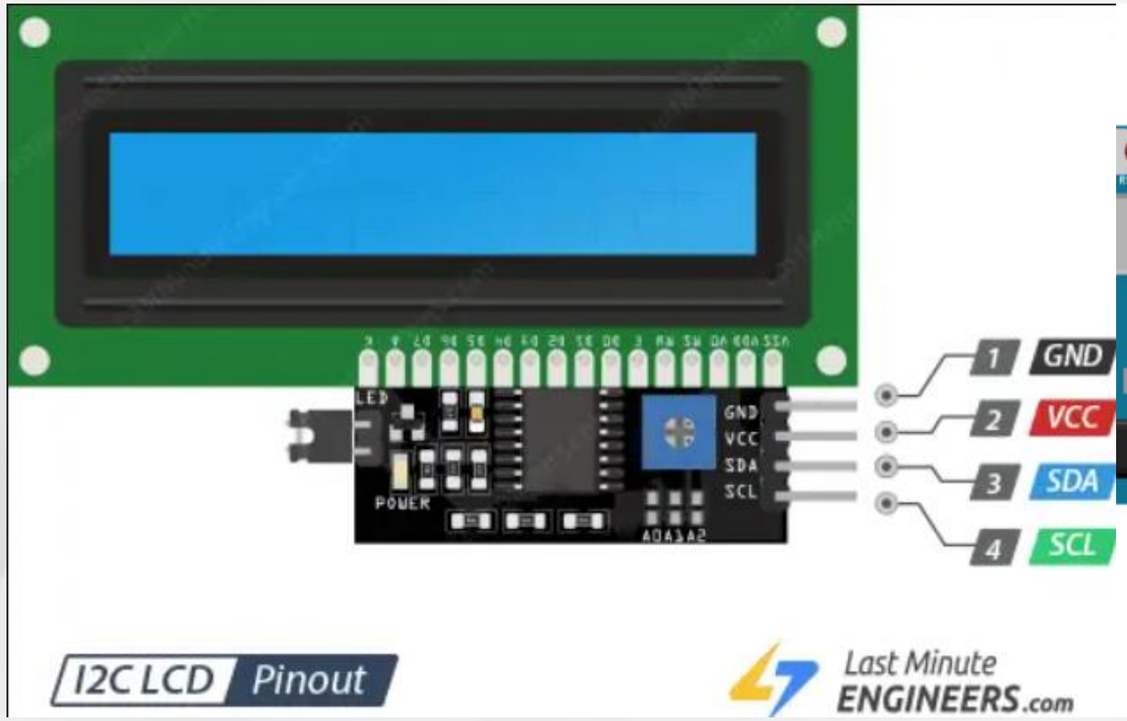

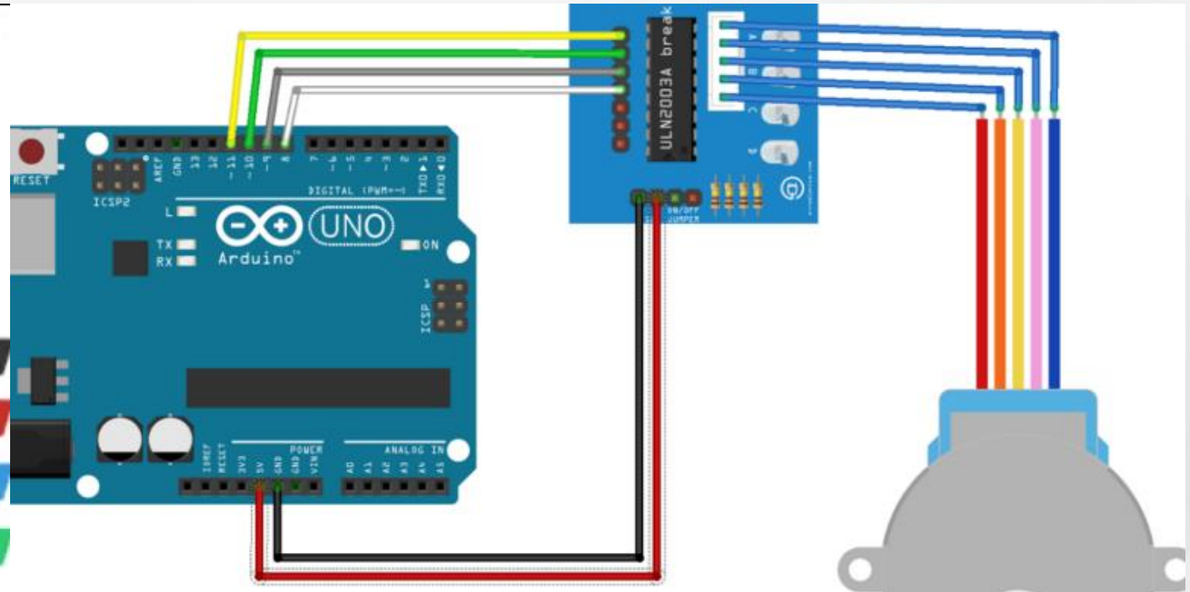

LCD I2C

STEPPER MOTOR

DISCUSSION - MATERIALS PIN OUT

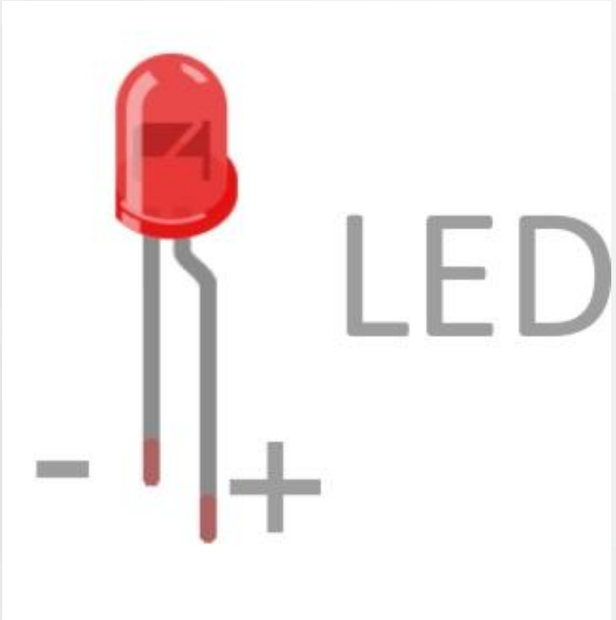

LED

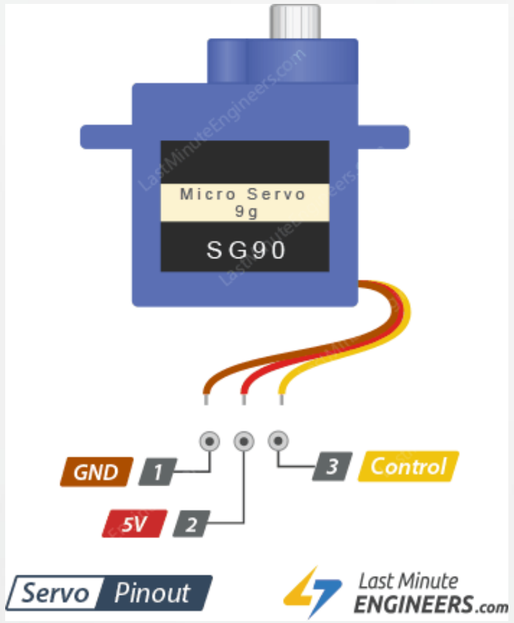

SERVO

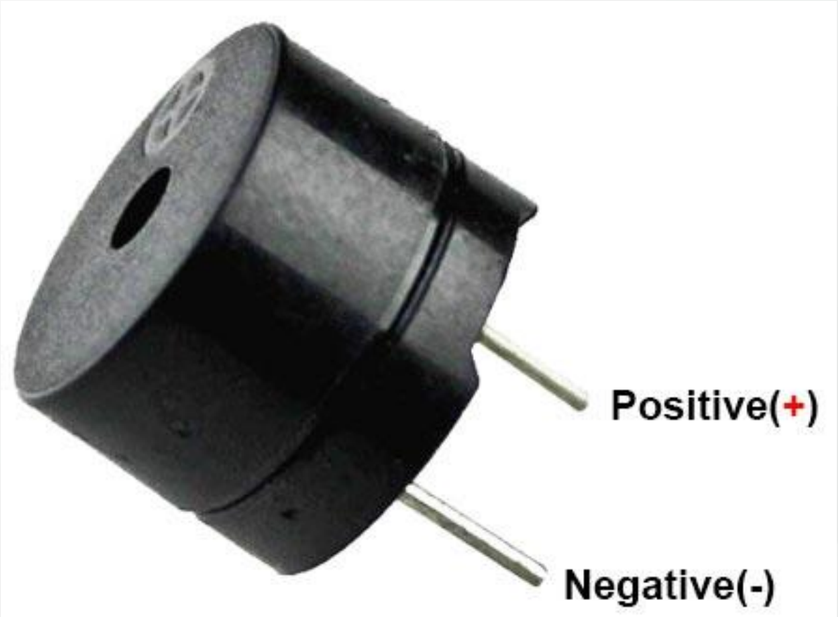

BUZZER

DISCUSSION - CIRCUIT DIAGRAM

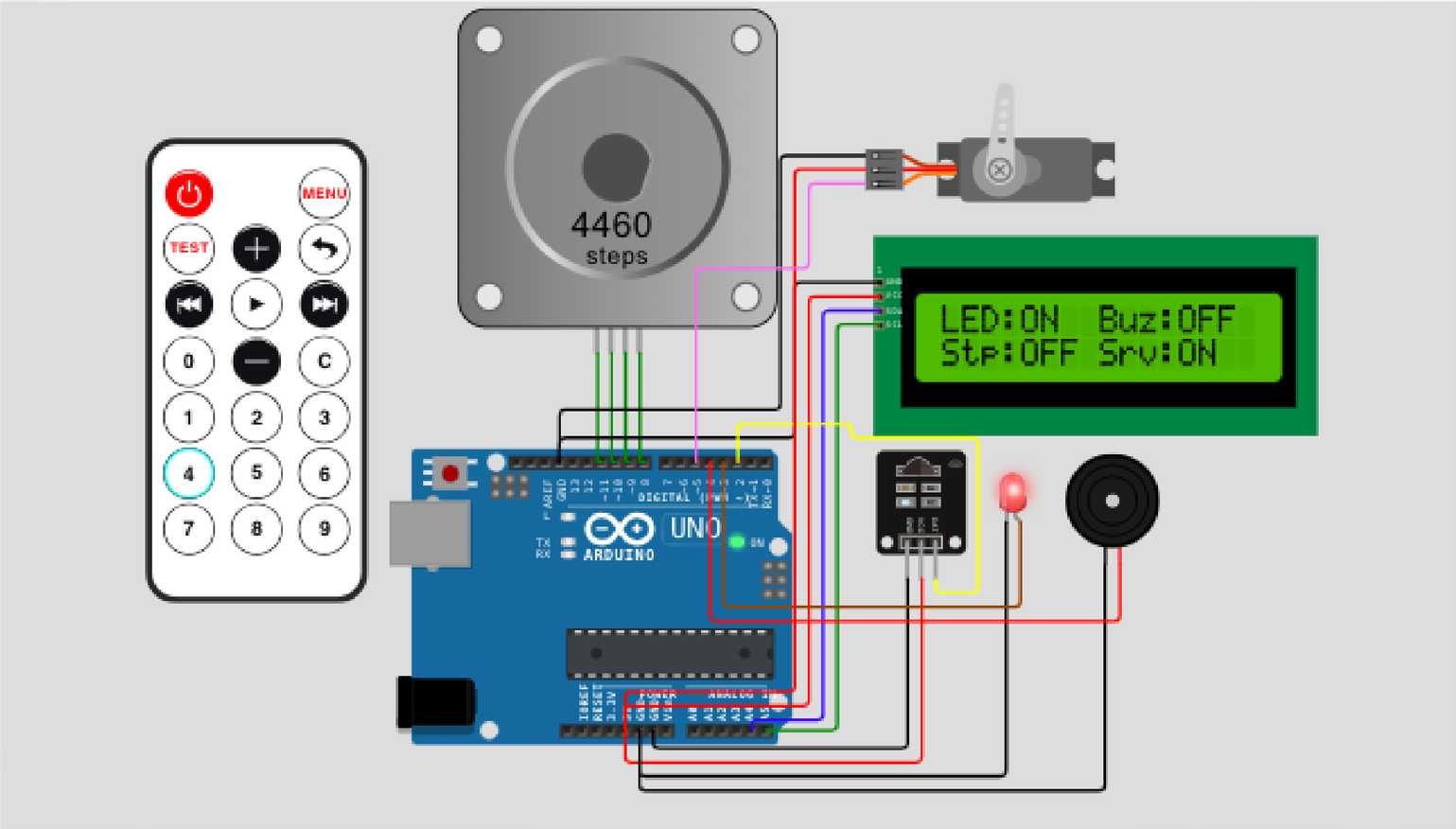

DISCUSSION – COMPONENT RESEARCH

- **Exploring New Components:**
  - **Worked with unfamiliar components: IR remote and stepper motor.**
  - **Researched how components function and their integration.**
- **Remote HEX Value Testing:**
  - **Identified HEX values of remote buttons using online code.**
  - **Successfully implemented an LED on/off test function as the first step.**

MAPÚA UNIVERSITY

DISCUSSION – KEY CODE

```
/* Key    Code
 CH-    BA45FF00
 CH     B946FF00
 CH+    B847FF00
 <<     BB44FF00
 >>     BF40FF00
 >||    BC43FF00
 -      F807FF00
 +      EA15FF00
 EQ     F609FF00
 100+   E619FF00
 200+   F20DFF00
 0      E916FF00
 1      F30CFF00
 2      E718FF00
 3      A15EFF00
 4      F708FF00
 5      E31CFF00
 6      A55AFF00
 7      BD42FF00
 8      AD52FF00
 9      B54AFF00 */
```

MAPÚA UNIVERSITY

DISCUSSION - INTEGRATION AND CHALLENGES

- Incremental Progress:
  - After the LED test, integrated the buzzer, which was straightforward.
  - Challenges with Motors:
- Issues with servo and stepper motors running simultaneously:
  - Voltage and current limitations caused uneven rotation and performance.
  - Adding the LCD further strained the system.
- Solutions Implemented:
  - Introduced power modules and a battery to improve current delivery.
  - Despite this, occasional lags persisted.

MAPÚA UNIVERSITY

DISCUSSION – SYSTEM TESTING AND REFINEMENT

Code Completion:

- **Developed and combined all component codes.**
- **Focused on debugging and optimizing performance.**

Final Testing:

- **Ensured all objectives were met:**
  - **Real-time operation of appliances.**
  - **Smooth functionality of the integrated system.**

Key Takeaways:

- **Highlighted the need for effective power management.**
- **Reinforced the importance of iterative testing and debugging.**

MAPÚA UNIVERSITY

DISCUSSION - INITIALIZATION

```
#include <IRremote.hpp>
#include <Stepper.h>
#include <Servo.h>
#include <LiquidCrystal_I2C.h>

const int LED = 3;
const int BUZZER = 4;
const int stepsPerRevolution = 2048;

int ServoPos = 0;
bool ServoSweepDirection = true; //track direction
Servo RemotedServo;
Stepper RemotedStepper = Stepper(stepsPerRevolution, 8, 9, 10, 11);
LiquidCrystal_I2C lcd(0x27, 16, 2);

//Bool Statement
bool LEDHIGH = false;
bool BUZZERHIGH = false;
bool StepperON = false;
bool ServoON = false;
bool LCDON = false;

//Button Code
#define Button0 0xE916FF00 // Code for Button 0
#define Button1 0xF30CFF00 // Code for Button 1
#define Button2 0xE718FF00 // Code for Button 2
#define Button3 0xA15EFF00 // Code for Button 3
#define Button4 0xF708FF00 // Code for Button 4
```

MAPÚA UNIVERSITY

DISCUSSION - SETUP

```
void setup(){
  Serial.begin(9600);
  IrReceiver.begin(2, ENABLE_LED_FEEDBACK);
  Serial.println("Ir Receiver Ready");

  pinMode(LED, OUTPUT);
  pinMode(BUZZER, OUTPUT);
  digitalWrite(LED, LOW); //Set Led Initially to off
  digitalWrite(BUZZER, LOW); //Set Led Initially to off
  RemotedStepper.setSpeed(10); //Set the RPM of the Stepper
  RemotedServo.attach(5);
  lcd.init();
  lcd.backlight();
}
```

MAPÚA UNIVERSITY

DISCUSSION – Update LCD Function

```
void updateLCD() {
  lcd.setCursor(0, 0);
  lcd.print("LED: ");
  lcd.print(LEDHIGH ? "ON " : "OFF");
  lcd.print(" Buz: ");
  lcd.print(BUZZERHIGH ? "ON" : "OFF");

  lcd.setCursor(0, 1);
  lcd.print("Stp: ");
  lcd.print(StepperON ? "ON " : "OFF");
  lcd.print(" Srv: ");
  lcd.print(ServoON ? "ON" : "OFF");
}
```

MAPÚA UNIVERSITY

DISCUSSION – LOOP

```
void loop(){

  if (IrReceiver.decode()){
    uint32_t decodedValue = IrReceiver.decodedIRData.decodedRawData;
    Serial.print("Decoded Data: ");
    Serial.println(decodedValue, HEX);

    if (decodedValue == Button1 && !LEDHIGH){
      digitalWrite(LED, HIGH);
      LEDHIGH = true;
    } else if (decodedValue == Button1 && LEDHIGH){
      digitalWrite(LED, LOW);
      LEDHIGH = false;
    }

    if (decodedValue == Button2 && !BUZZERHIGH){
      digitalWrite(BUZZER, HIGH);
      BUZZERHIGH = true;
    } else if (decodedValue == Button2 && BUZZERHIGH){
      digitalWrite(BUZZER, LOW);
      BUZZERHIGH = false;
    }

    if (decodedValue == Button3){
      StepperON = !StepperON;
    }

    if (decodedValue == Button4){
      ServoON = !ServoON;
    }
```

MAPÚA UNIVERSITY

DISCUSSION – LOOP

```
  if (decodedValue == Button0) {
    LCDON = !LCDON;
    if (LCDON) {
      lcd.backlight();
    } else {
      lcd.clear();
      lcd.noBacklight();
    }
  }

  IrReceiver.resume();
}

  if (LCDON) {
    updateLCD();
  }

  if (StepperON){
    RemotedStepper.step(stepsPerRevolution / 100);
  }

  if (ServoON){
    if (ServoSweepDirection){
      ServoPos += 1;
      if (ServoPos >= 180){
        ServoSweepDirection = false;
      }
    } else {
      ServoPos -= 1;
      if (ServoPos <= 0){
        ServoSweepDirection = true;
      }
    }
    RemotedServo.write(ServoPos);
    delay(15);
```

MAPÚA UNIVERSITY

DISCUSSION - INTEGRATION AND TESTING

- **TEST IR REMOTE FUNCTIONALITY:**
  - Verify if the IR remote functions correctly and integrates with the controller
- **TEST INDIVIDUAL COMPONENT FUNCTIONALITY:**

  Buzzer:
  - Verified basic operations (on/off and sound consistency).

  Motors (Stepper and Servo):
  - Tested each motor individually for smooth operation.
- **TEST LCD DISPLAY :**
  - Ensure smooth functionality of the LCD.
- **TEST INTEGRATED SYSTEM :**
  - Verify functionality of all components working together.

MAPÚA UNIVERSITY

CONCLUSION

Objectives Achieved:

- Showcase how an appliance controller operates in real-time using a keypad and wireless communication.
- Applied knowledge of logic circuits, switching theory, and principles learned in CPE160P to implement the system.
- Implement a real-time embedded system using an **Arduino kit** and integrate multiple components effectively.

MAPÚA UNIVERSITY